Excequal

VCXO

VC1496

0.75MHz ~ 800MHz PECL or LVDS 50 ohm
TO Vcc-2.0V
or 100 ohm differential

MECHANICAL DIMENSIONS

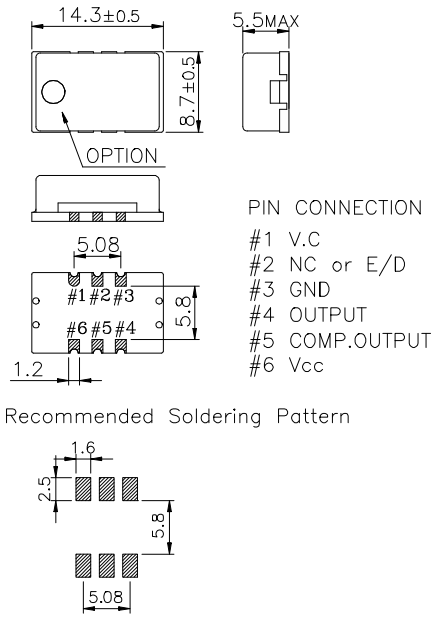

PIN CONNECTION

#1 V.C
#2 NC or E/D
#3 GND
#4 OUTPUT
#5 COMP.OUTPUT
#6 Vcc

OUTPUT WAVEFORM

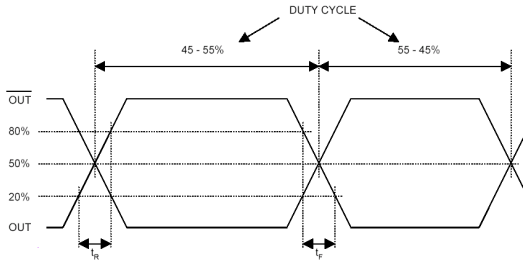

TEST CIRCUIT

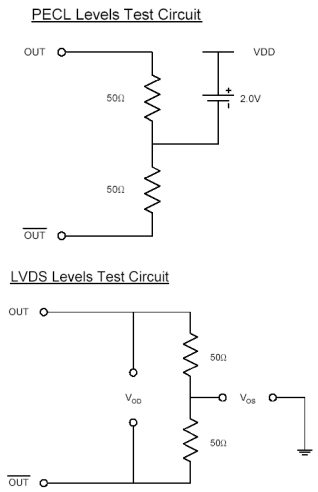

ELECTRICAL SPECIFICATION

Frequency range	0.75MHz to 800.000MHz All combination of Frequency range Vs. Package type might not be available ,please contact factory		
Frequency Stability vs. Temperature vs. Aging	 ± 10 ppm to ±50ppm ±3.0 ppm max/ year		
Temperature Range Operating Storage	 See Table 2 -55℃ to 105℃		
Supply Voltage	3.3V ± 5% 5.0V ± 5%		
Input Current 3.3 V , 5V	24.000MHz ~ 800.000MHz 25mA max ~ 100mA max		
Output characteristics		pecl	lvds
	Voh Logic "1"	Vdd-1.025v min.	1.43v typ.
	Vol Logic "0"	Vdd-1.620v max.	1.10v typ.
	Rise Time Tr	1.0 nsec max.	1.0 nsec max.
	Fall Time Tf	1.0 nsec min.	1.0 nsec min.
	Duty Cycle	50//50 ± 5%	50//50 ± 5%
	Differential Output	Vod(Lvds)	330mV typ.
	Offset Voltage	Vos(Lvds)	1.2V typ
Pull Characteristics			
Pulling Range	±50ppm / ±100 / ±150 ppm min Wide pulling range : contact company		
Control Range	1.65V ± 1.5V (Vdd : 3.3V) 2.5V ± 2.5V (Vdd : 5.0V)		
JITTER (RMS)	Phase Jitter (12KHz ~ 20MHz) 1.0 psec MAX		

ENVIROMENTAL & MECHANICAL SPECIFICATION

Shock	MIL-STD-883C, Method 2002, Condition B
Vibration	MIL-STD-883C, Method 2007, Condition A
Solderability	MIL-STD-883C, Method 2003
Seal integrity	MIL-STD-883C, Method 1014, Condition C & A2
Marking	MIL-STD-202F, Method 215

TABLE1

Symbol	Stability
10	± 10ppm
15	± 15ppm
20	± 20ppm
30	± 30ppm
50	± 50ppm
100	±100ppm

TABLE2

Symbol	Temp.	Symbol	Temp.
0	0℃	A	50℃
1	-10℃	B	60℃
2	-20℃	C	70℃
3	-30℃	D	75℃
4	-40℃	E	80℃
		F	85℃

Unit 153 5/F BLD#2 Building BeiYuan South Street24th Tong Zhou District Beijing China 101100 www.excequal.com
Tel:86-10-69552503 Fax:86-10-80885622 Email:sales@excequal.com